ELECTRICAL, DASH INSTRUMENTS, CONTROLS, & LIGHTING - Z26S4D92AN/AH/BN/BH (C750906)

RZR - RZR PRO S4 ULTIMATE (R01) - Z26S4D92AN/AH/BN/BH

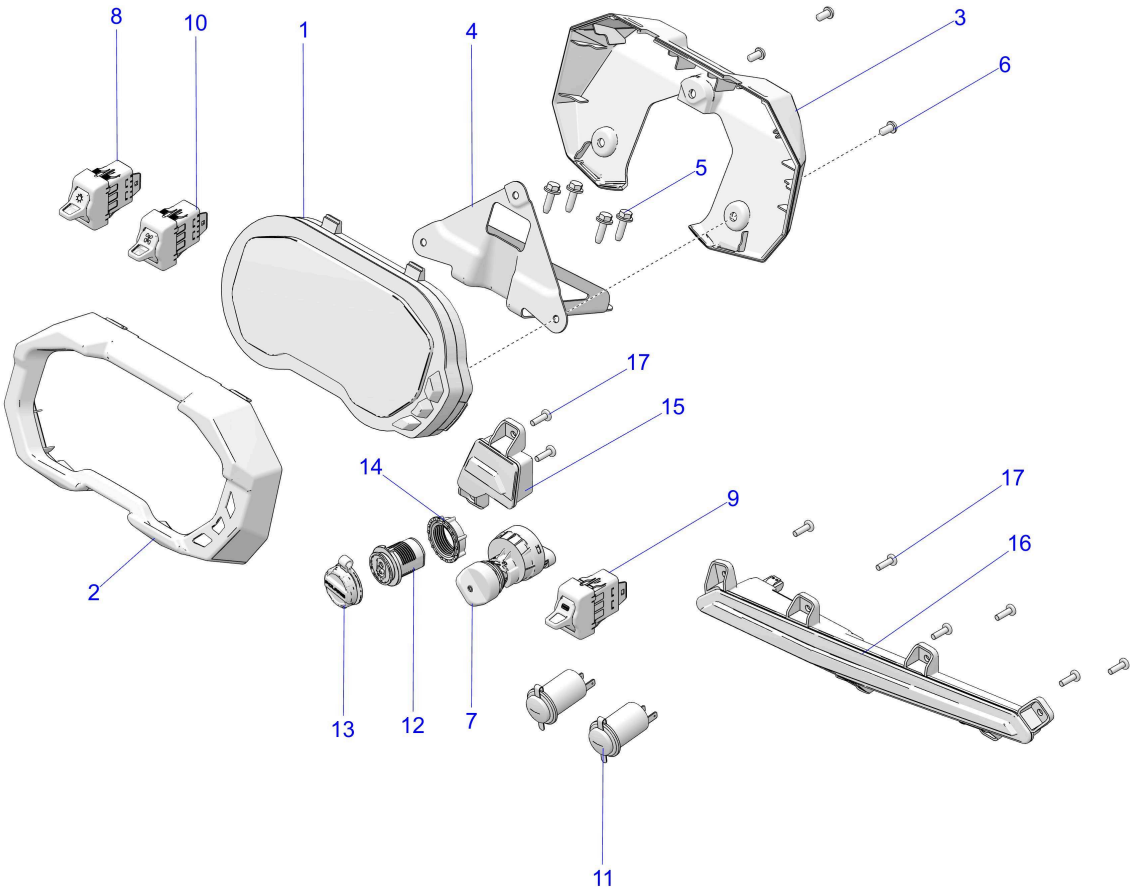

© 2025 Polaris Industries Inc.

C750906

Reference #	*Part#*	*Description*	*Quantity*
1	3286995	ASM-C4,250K	1
2	5459971-070	PANEL-DASH,BEZEL,C4,BLK	1
3	5455957	BEZEL-GAUGE,REAR	1
4	5266496	BRKT-MOUNT,C4 GAUGE	1
5	7518529	SCR-M6X1.0X20,HXHD,FLG,TDFM,BK	4
6	7519063	SCREW-TXBH-M6X1.0X12 8.8 ZPB D20	3
7	4016135	SWITCH-KEY,4 POSITION,SEALED [TO 1.6.2026]	1
7	4083545	SWITCH-KEY,4 POSITION,SEALED [FROM 1.6.2026]	1
8	4081621	SWITCH-HEADLIGHT	1
9	4018462	SWITCH-DRIVER MODE	1
10	4080751	SWITCH-3 POSITION 4WD	1
11	4012393	RECEPTACLE-POD MNT,12 VOLT	2
12	2415295	ASM-CHARGE PORT,BASE [INCL. 12-14]	1
12	2415198	PLUG-HARNESS CHARGE PORT	1
13	5417215	CAP-CHARGE PORT	1
14	5456622	NUT-CHARGE PORT	1
15	2418039	ASM-LIGHT,DASH,5700K,ANMTD,LH	1
16	2418040	ASM-LIGHT,DASH,5700K,ANMTD,RH	1

17	7518238	SCREW-10X5/8-HI/LO,PN-T25,TRX-M	8

Copyright 1996-2026 Polaris Industries U.S.A All rights reserved.